Product datasheet:

Locking plugs nickel-plated brass flameproof enclosure Ex d IIC

Entry thread metric

· with O-ring

Article number:	**8710.63**
EAN:	7611614140261
Packaging quantity:	10
Price group:	530

Dimensions / Form	
Thread:	M63x1.5
Spanner size:	70 mm
Dimension H:	12 mm
Thread length L:	15 mm

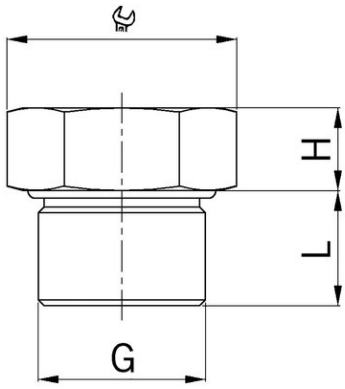

Connections / Entries	
clamp technology:	Compression technology

Features	
Thread type:	metric
Product type:	closing screw

Approvals / Certifications	
Protection class:	IP68
Protection class with condition:	IP 68 (30 bar)
Explosion-proof design:	Yes
EX zone:	Gas 1 and 2 - Dust 21 and 22
Gas:	II 2G Ex db eb IIC Gb
Dust:	Ex Series 18 D
Test standard:	IEC EN 60079-31
IECEx certification:	IECEx PTB 12.0056
Further certifications:	PTB 00 ATEX 1059
Connectivity certification:	PTB 00 ATEX 1059

Storage / Installation / Operation	
Minimum operating temperature:	-40 °C
Maximum operating temperature:	100 °C

Certificates

Planning data